FlexPod Data Center Solution: Validation Testplan Template

John George, Lindsey Street, Chris Reno, and Arvind Ramakrishnan, NetApp
Chris O'Brien, Cisco
07/2013

TABLE OF CONTENTS

LIST OF TABLES

LIST OF FIGURES

1 OVERVIEW OF TEST PLAN

All NetApp solutions require a set of rigorous validation tests be conducted to ensure the defined solution delivers on the functionality and performance requirements associated with the given solution. In order to ensure a high level of rigor in the solution validation process, it's critical that engineers follow a consistent process for defining and executing test cases.

2 HIGH LEVEL SOLUTION SUMMARY

FlexPod is a best practice data center architecture that is built with three components:

- Cisco Unified Computing System™ (Cisco UCS®)
- Cisco Nexus® switches
- NetApp fabric-attached storage (FAS) systems

These components are connected and configured according to the best practices of both Cisco and NetApp to provide the ideal platform for running a variety of enterprise workloads with confidence. FlexPod can scale up for greater performance and capacity (adding compute, network, or storage resources individually as needed), or it can scale out for environments that need multiple consistent deployments (rolling out additional FlexPod stacks). FlexPod delivers not only a baseline configuration but also the flexibility to be sized and optimized to accommodate many different use cases.

Typically, the more scalable and flexible a solution is, the more difficult it becomes to maintain a single unified architecture capable of offering the same features and functionality across each implementation. This is one of the key benefits of FlexPod. Each of the component families in FlexPod (Cisco UCS, Cisco Nexus, and NetApp FAS) offers platform and resource options to scale the infrastructure up or down while supporting the same features and functionality that are required under the configuration and connectivity best practices of FlexPod.

3 HIGH LEVEL SCOPE OF TESTING

This testplan tests the High Availability functions of the elements of FlexPod.

4 DELIVERABLES

This section provides the deliverables required as a result of the testing. In general, these might include things like solution guides, sizing guides, and Modular Architecture modules.

FlexPod "Animal" release project deliverables including:

- FlexPod Data Center Solution NVA Update
- vSphere 5 on FlexPod (Clustered ONTAP) Deployment Guide CVD
- vSphere 5 on FlexPod (7-Mode) Deployment Guide CVD

5 HARDWARE AND SOFTWARE REQUIREMENTS

Use this section to provide the specifics of both the hardware and software components required to execute the desired testing. This includes, but is not limited to, the following:

Table 1) Hardware and Software Requirements

Layer	Compute	Version or Release	Details
Compute	Cisco UCS fabric interconnect	2.1(1b)	Embedded management
	Cisco UCS C 200 M2	2.1(1b)	Software bundle release
	Cisco UCS C 220 M3	2.1(1b)	Software bundle release
	Cisco UCS B 200 M2	2.1(1b)	Software bundle release
	Cisco UCS B 200 M3	2.1(1b)	Software bundle release
	Cisco enic	2.1.2.38	Ethernet driver for Cisco VIC
	Cisco fnic	1.5.0.20	FCoE driver for Cisco VIC
Network	Cisco Nexus fabric switch	5.2(1)N1(3)	Operating system version
Storage	NetApp FAS3250-A	Clustered Data ONTAP 8.1.2	Operating system version
Software	Cisco UCS hosts	VMware vSphere ESXi™ 5.1	Operating system version
	Microsoft® .NET Framework	3.5.1	Feature enabled within Windows® operating system
	Microsoft SQL Server®	Microsoft SQL Server 2008 R2 SP1	VM (1 each): SQL Server DB
	VMware vCenter™	5.1	VM (1 each): VMware vCenter
	NetApp OnCommand®	5.1	VM (1 each): OnCommand
	NetApp Virtual Storage Console (VSC)	4.1	Plug-in within VMware vCenter
	Cisco Nexus 1110-x	4.2(1) SP1(5.1a)	Virtual services appliance
	Cisco Nexus 1000v	4.2(1)SV2(1.1a)	Virtual services blade within the 1110-x

6 TEST CONFIGURATION

This section provides the connectivity and configuration details of the specific FlexPod required.

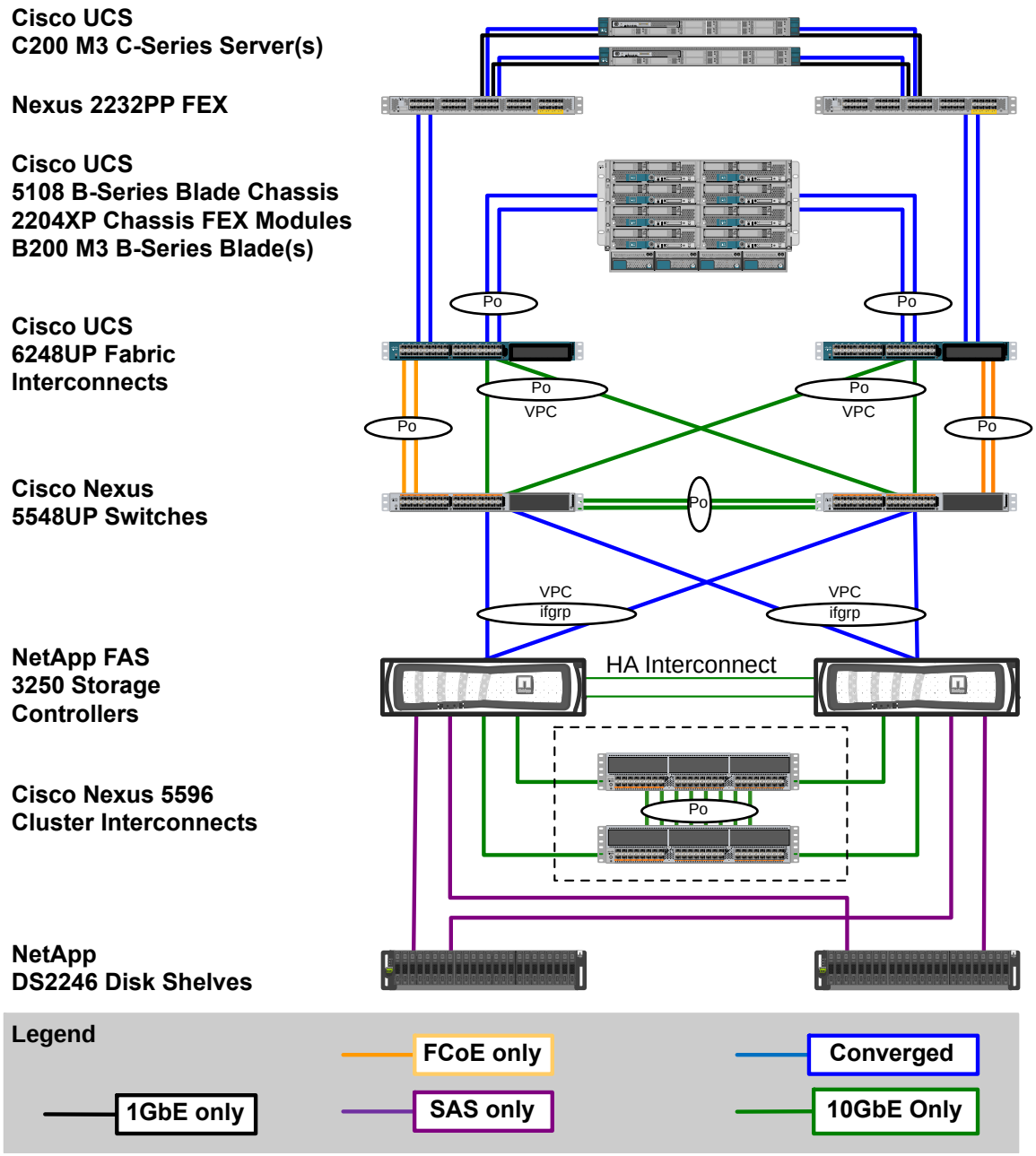

7 STANDARD WORKLOAD

7.1 Overview

For the purposes of the required testing outlined in the following sections, a standard FlexPod testplan workload will be deployed using IOMeter across the environment. Once the standard workload is deployed, the same workload will be used throughout all test procedures. The workload will be started prior to each test case and stopped after each test case. A single log file will be generated by IOMeter for each individual test case. This will allow correlation between the individual test scnearios and the data provided by the IOMeter log file.

7.2 Workload Setup

Once the FlexPod infrastructure has been setup according to the implementation guide for this specific FlePod release, perform the following steps to setup the necessary objects to support the FlexPod validation workload.

1. Create three new flexible volumes within the storage cluster. These can be created within the “Infra_Vserver” if desired, or you can create a new Vserver for validation purposes. Keep in mind there are other configuration steps that are needed if creating a new Vserver (i.e. create zones, lifs, etc.).
   - “iometer_infra (1.5TB) – used to store the controller and worker virtual machine files (C: drives)
   - “iometer_NFS (500GB) – used as a common NFS test datastore. Each “Worker” VM will have a small (10GB) vmdk file located within this datastore. NFS traffic will be generated between each VM testing NFS and this NFS datastore.
   - “iometer_FCoE” (1TB) – used to hold a common FCoE test LUN (VMFS datastore). Each “Worker” VM will have a small (10GB) vmdk file located within the VMFS formatted FCoE LUN that will reside in this volume.
2. Create the 500GB LUN called “iometer_FCoE” within the “iometer_FCoE” flexible volume.
3. Mount the “iometer_infra” and “iometer_NFS” volumes to each ESXi host being used for validation as an NFS datastore.
4. Mount the “iometer_FCoE” LUN to each ESXi host used for validation as a VMFS datastore. Create the necessary igroups, zones, lun mappings, etc. in order for each host being used in the validation to be able to mount. Don’t forget to configure for mutlipathing (i.e. zones on each switch, multiple lifs, etc.)

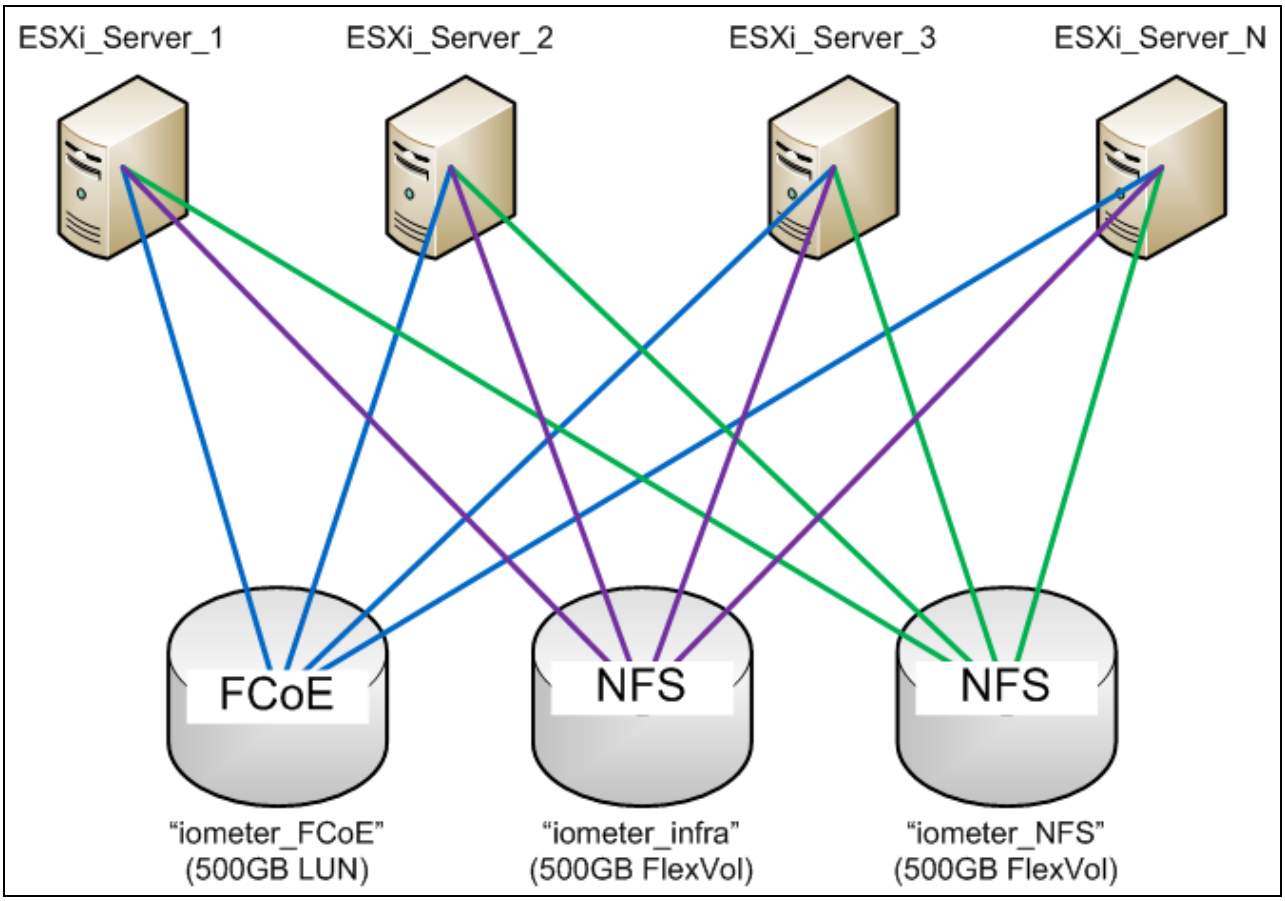

5. Obtain the "IOMeter_Controller" and "IOMeter_Worker_Gold" VM files. Import or register them within vCenter.

   NOTE: Do not power on the VMs yet. This is especially important with the "IOMeter_Worker_Gold" VM. Windows 2008 only allows a given image to be sysprep'd a total of three times or the image will need to be rebuilt. The VM has been syprep'd and shutdown upon creation.

6. Right click on the "IOMeter_Worker_Gold" VM and choose "Edit Settings".
7. Ensure that "Hard disk 1" resides within the "iometer_infra" NFS datastore.

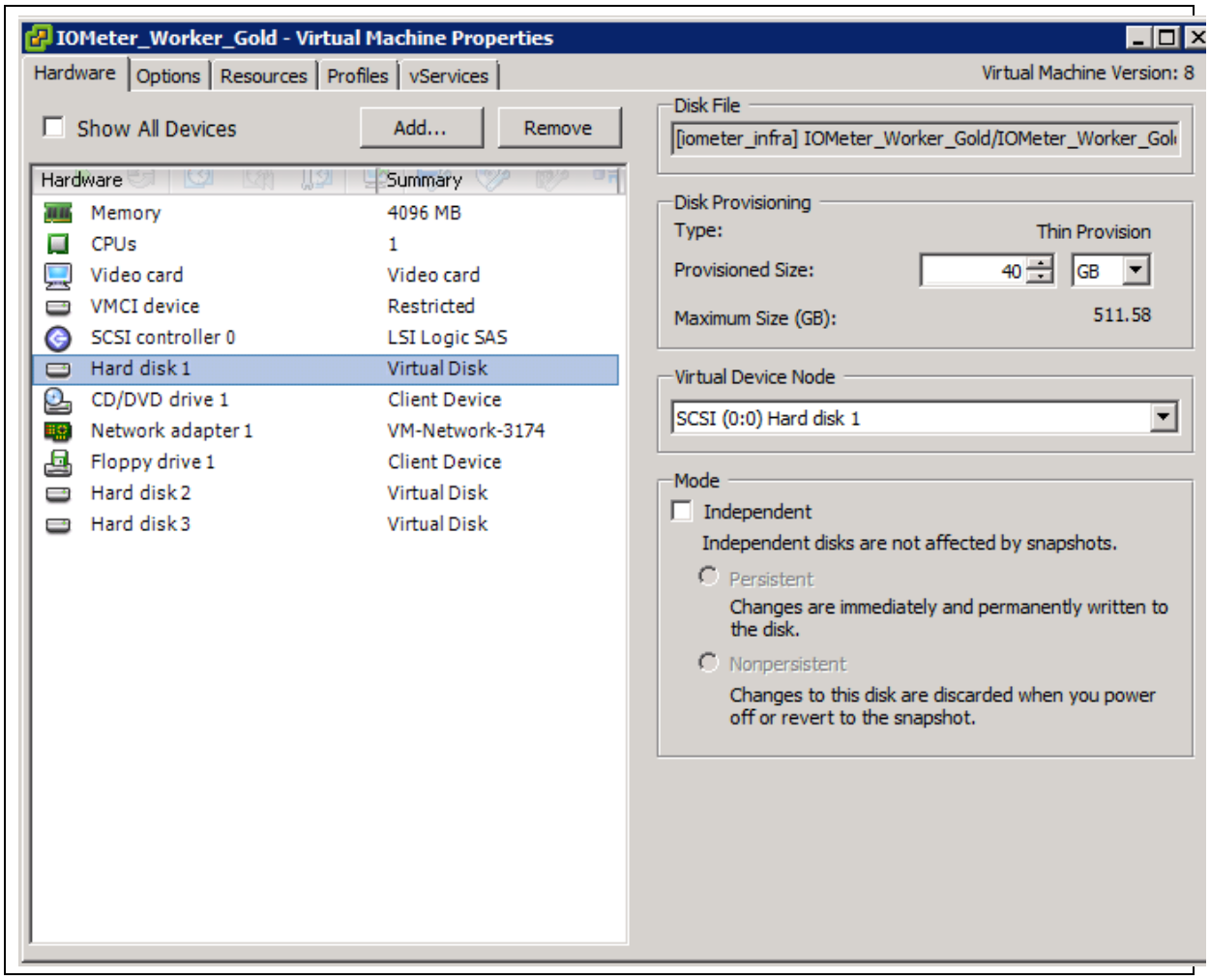

8. Ensure that “Hard disk 2” resides within the “iometer_NFS” NFS datastore. When the VM is moved around between different environments, this disk may need to be recreated. If there is an issue with “Hard disk 2” or it doesn not exist, simply create a new 10GB hard disk for this VM on the “iometer_NFS” NFS datastore.

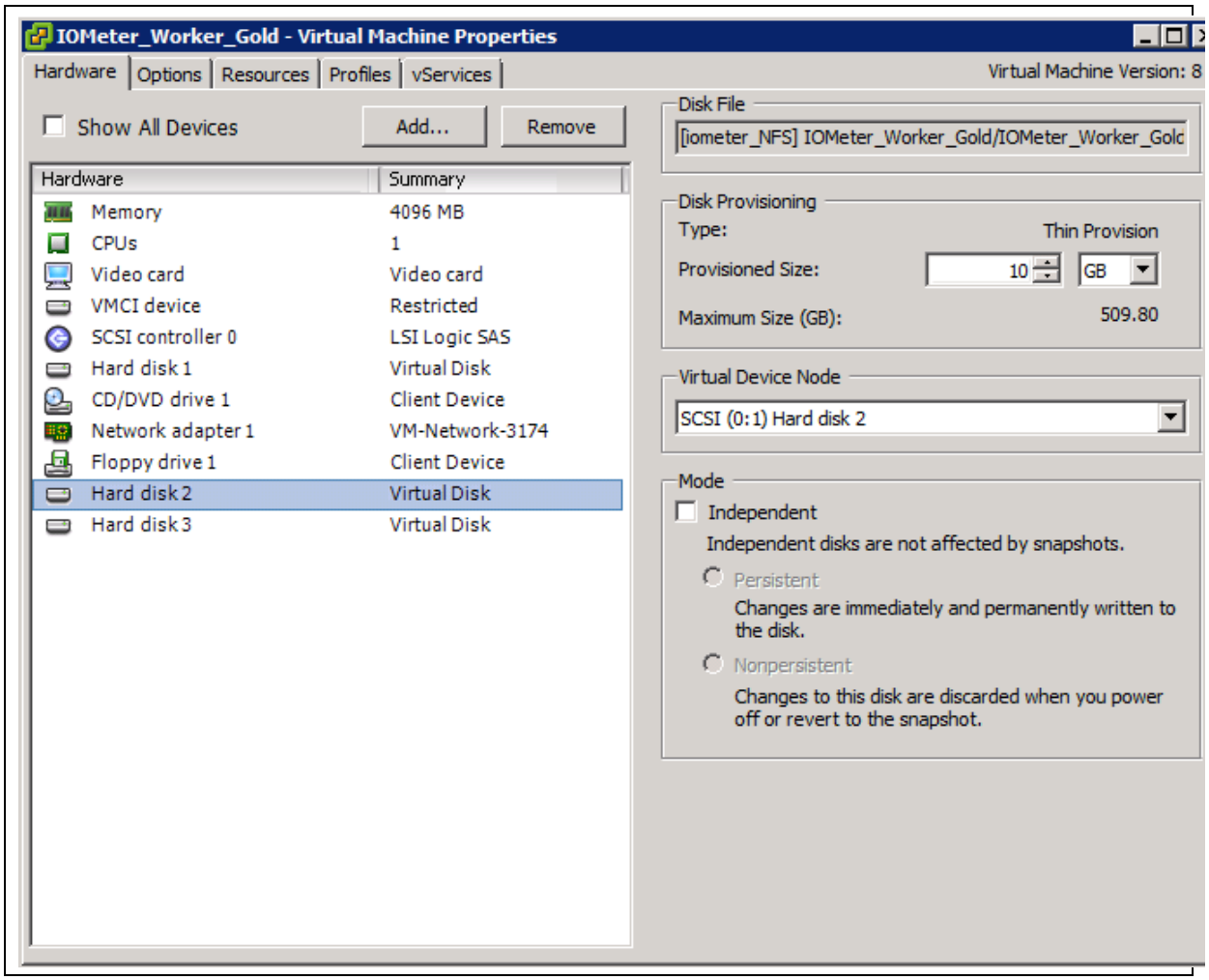

9. Ensure that “Hard disk 3” resides within the “iometer_FCoE” VMFS datastore. When the VM is moved around between different environments, this disk may need to be recreated. If there is an issue with “Hard disk 3” or it does not exist, simply create a new 10GB hard disk for this VM on the “iometer_FCoE” VMFS datastore.

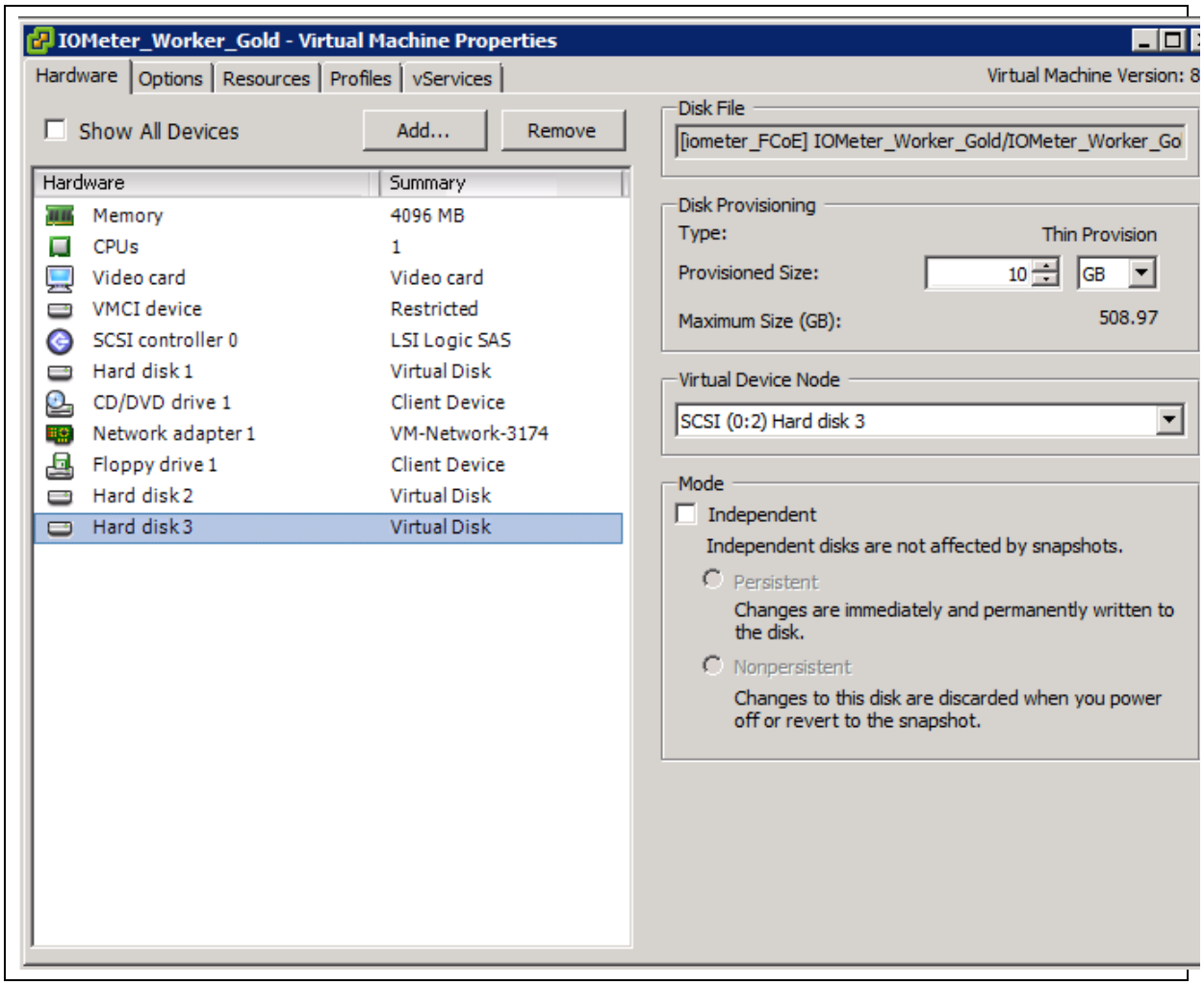

10. Ensure that the “Network Adapter 1” is set to the appropriate private network, usually labeled as the “VM Network” or “VM Traffic” in the FlexPod implementation guides.

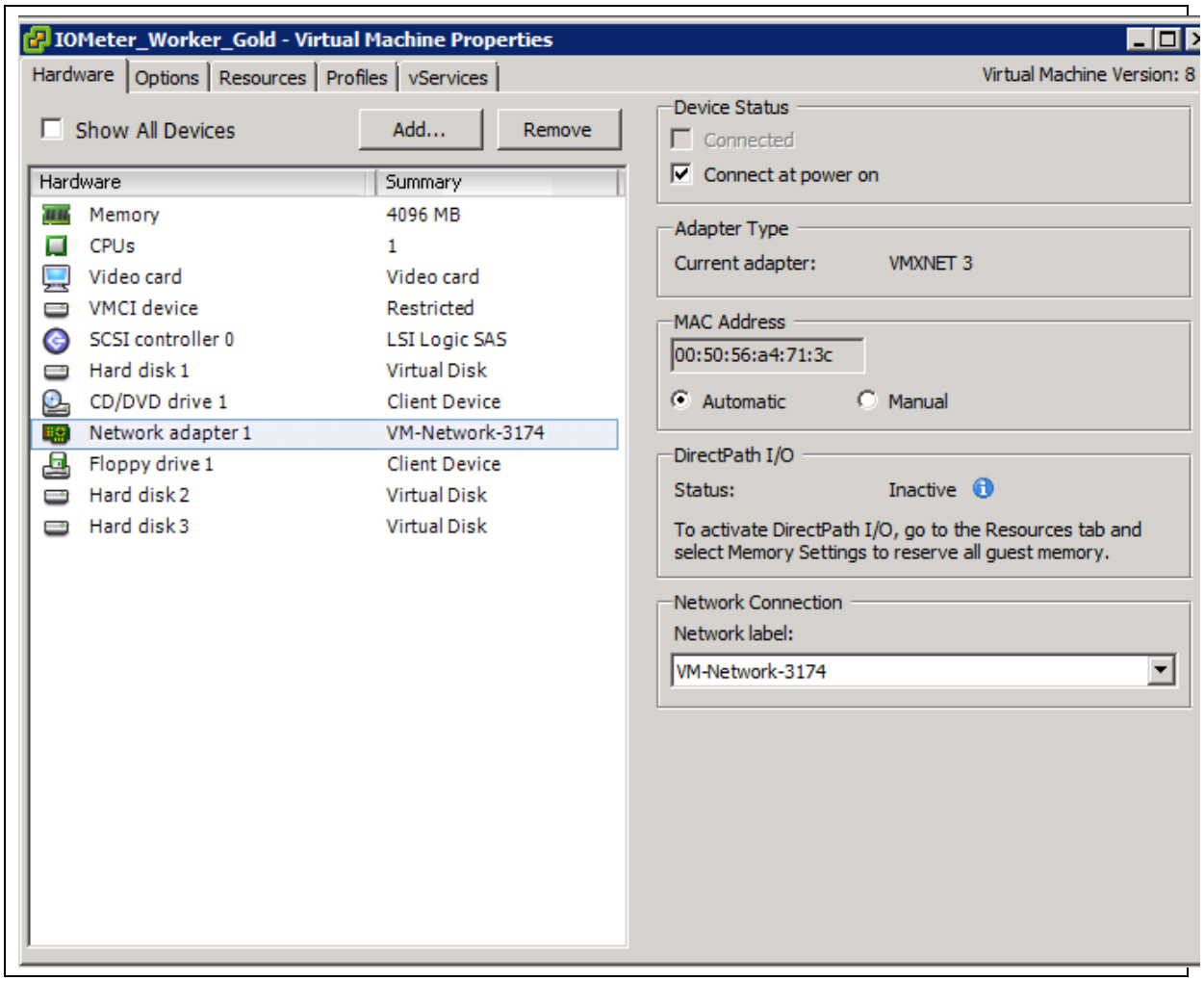

11. Right click on the “Win2k8_IOMeter_Controller” VM and choose “Edit Settings”.
12. Ensure that “Hard disk 1” resides within the “iometer_infra” NFS datastore.

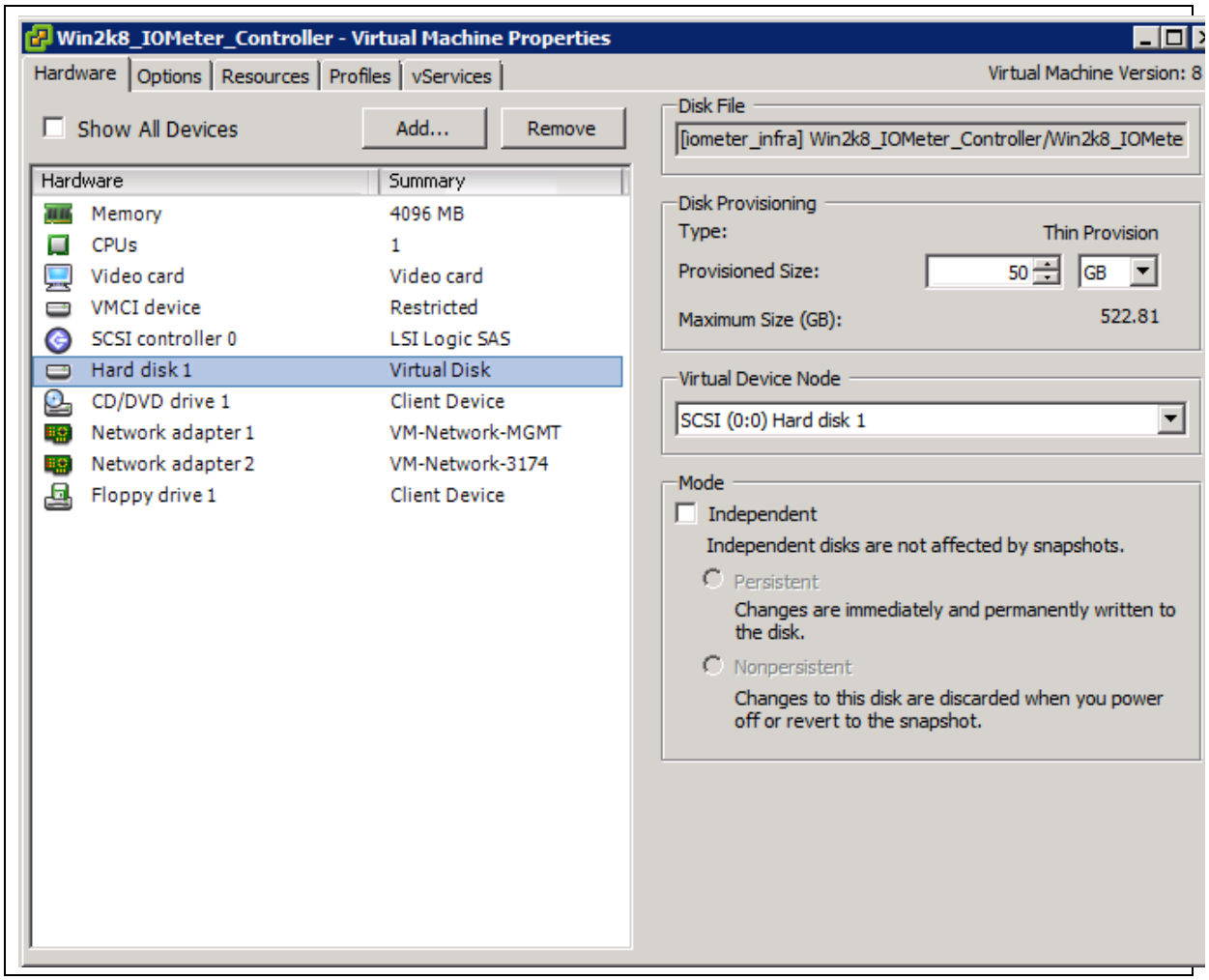

13. Ensure that “Network Adapter 1” resides on the “MGMT” or “public” network.

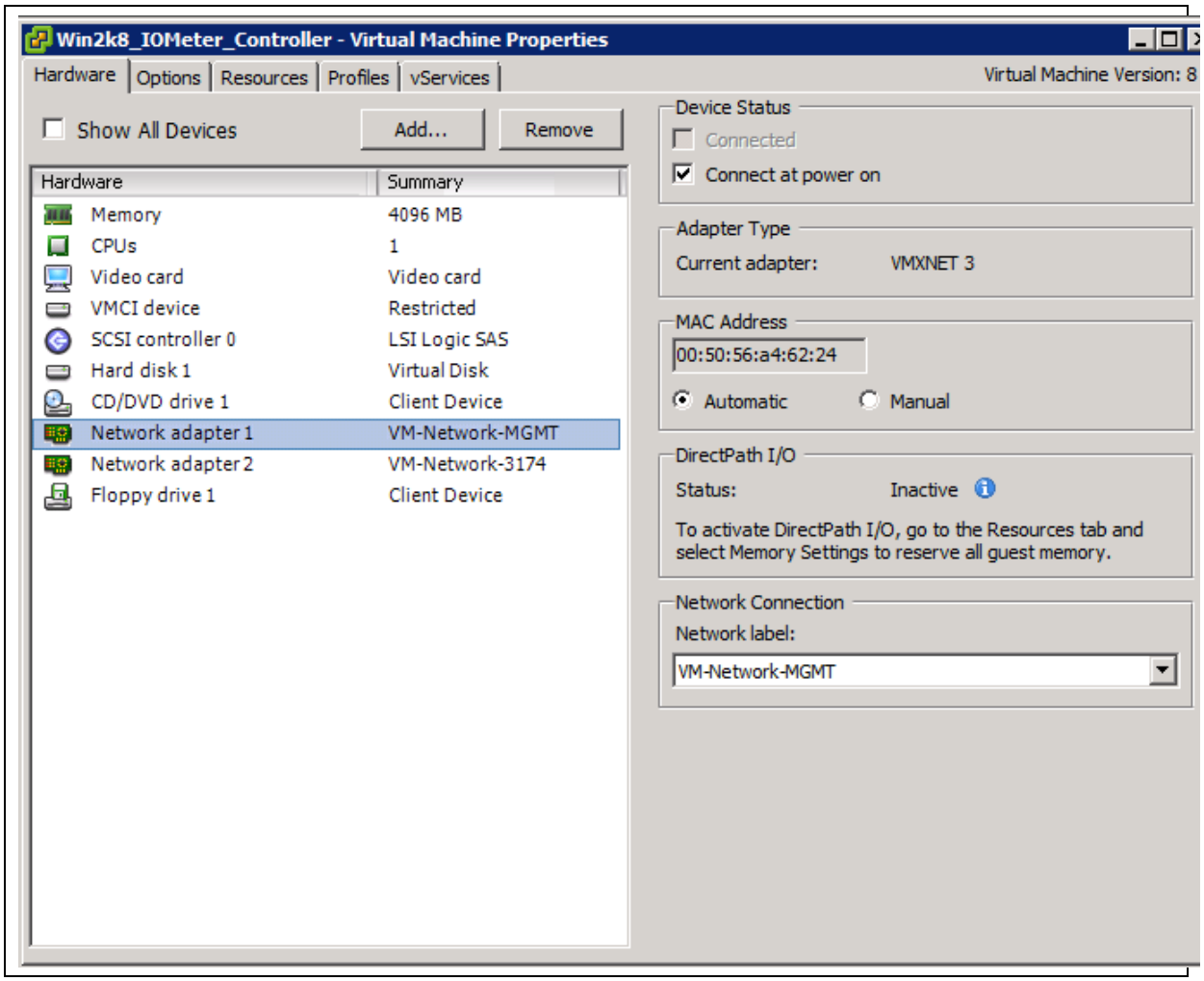

14. Ensure that “Network Adapter 2” resides on the same private network as the “IOMeter_Worker_Gold” VM.

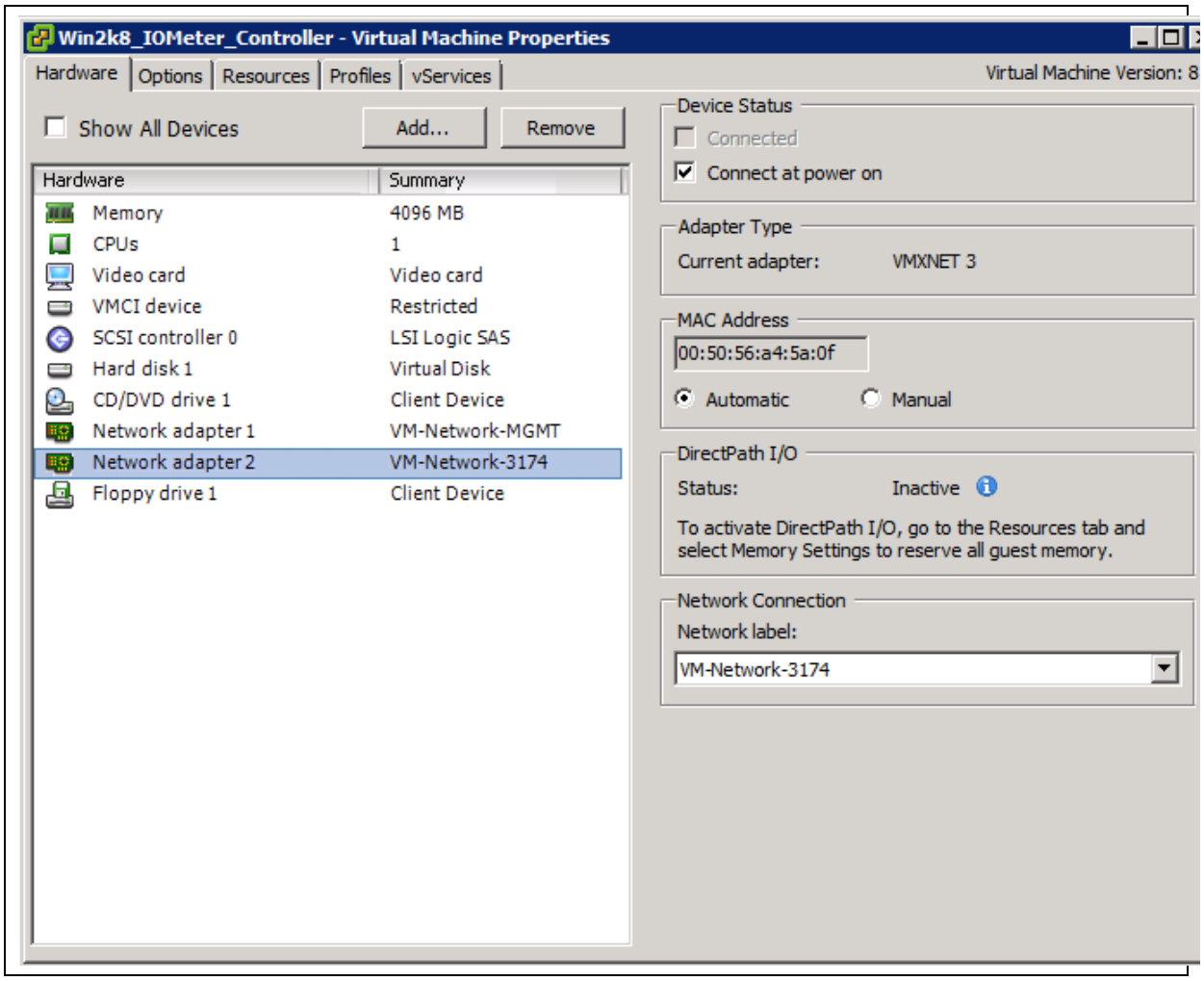

15. Power on the “Win2k8_IOMeter_Controller” VM.
16. Open a vSphere console to the “Win2k8_IOMeter_Controller” VM.
17. Log in using username: Administrator, password: NetApp!23
18. Check the IP address on the “MGMT_NETWORK” interface, change if necessary. Initial setup has the IP address set as “192.168.175.202”.
19. No need to change the IP address on the “PRIVATE_NETWORK” interface. If you do for some reason change this IP address, make sure to change the IP address scope for the DHCP server running on this VM as well. All the cloned “Worker” VMs will receive addresses via this DHCP instance.

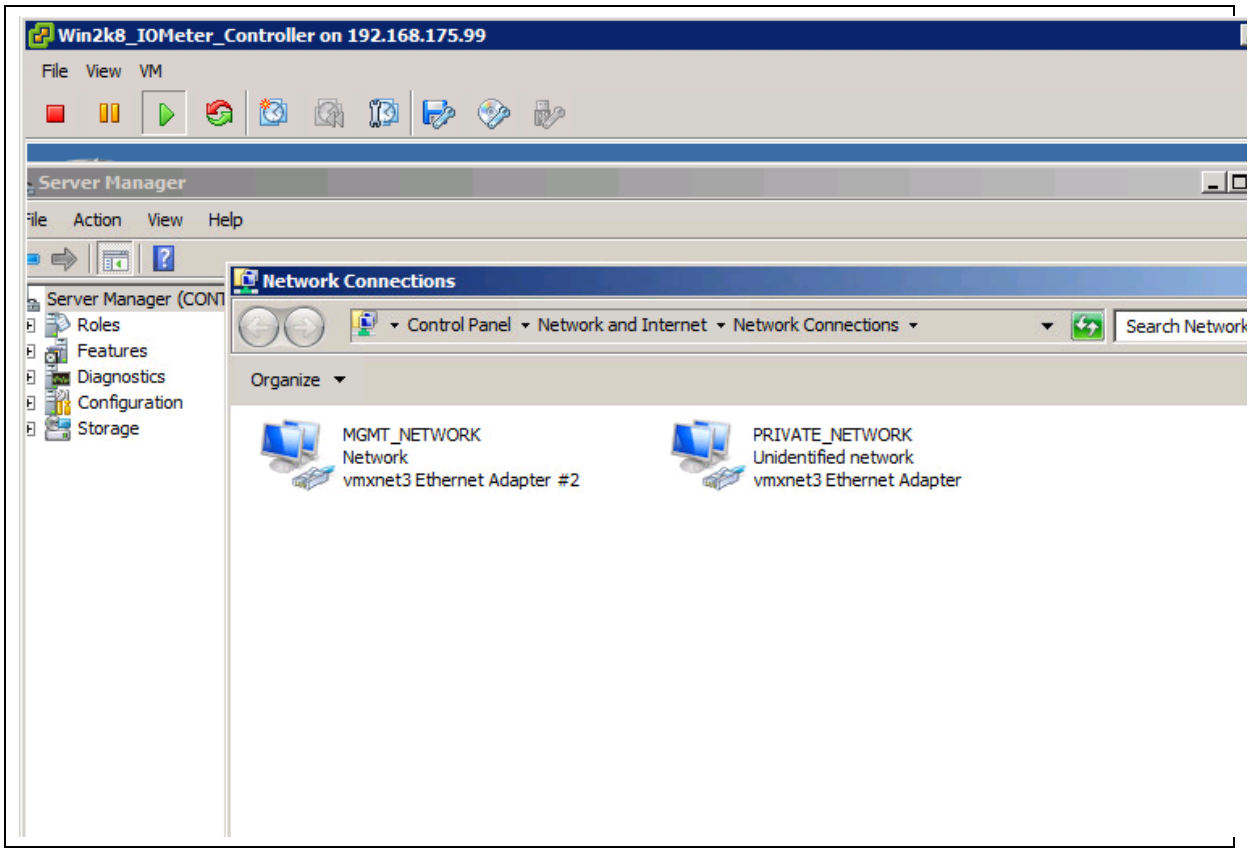

20. Within vSphere, right click on the “IOMeter_Worker_Gold” VM and choose “NetApp”→”Provisioning and Cloning”→”Create rapid clones”.

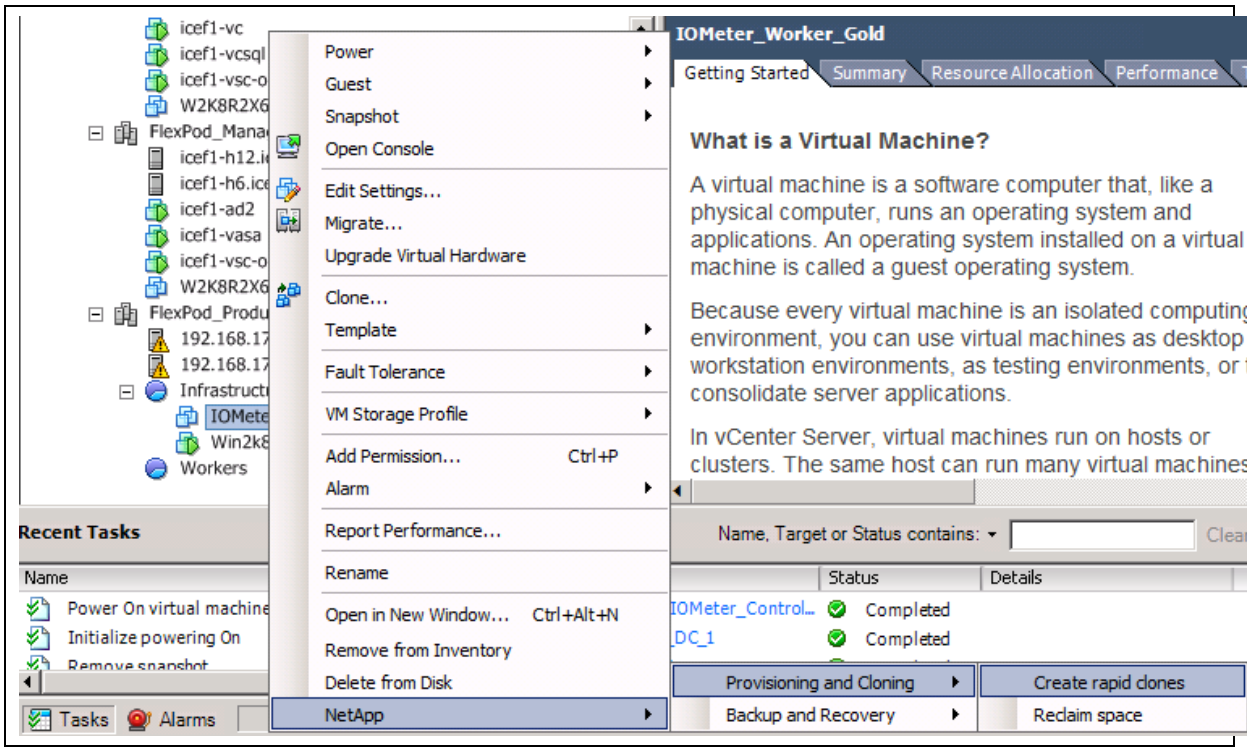

21. Follow the dialogue to create at total of 30 VM clones from the “IOMeter_Worker_Gold” VM. Make sure that all three hard disk drives (vmdks) for each clone end up on the correct datastore, this should happen by default, but double check the settings during clone setup.

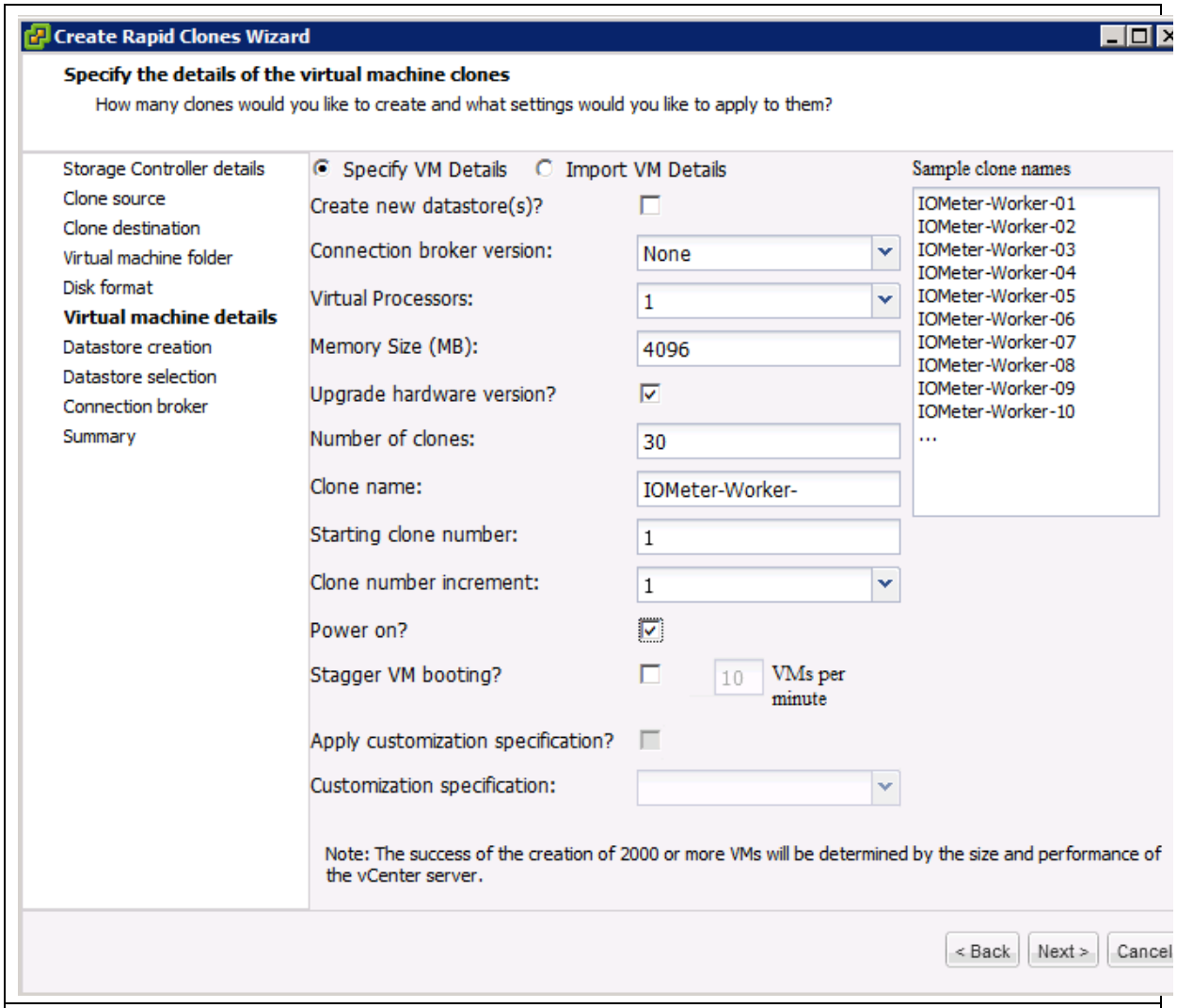

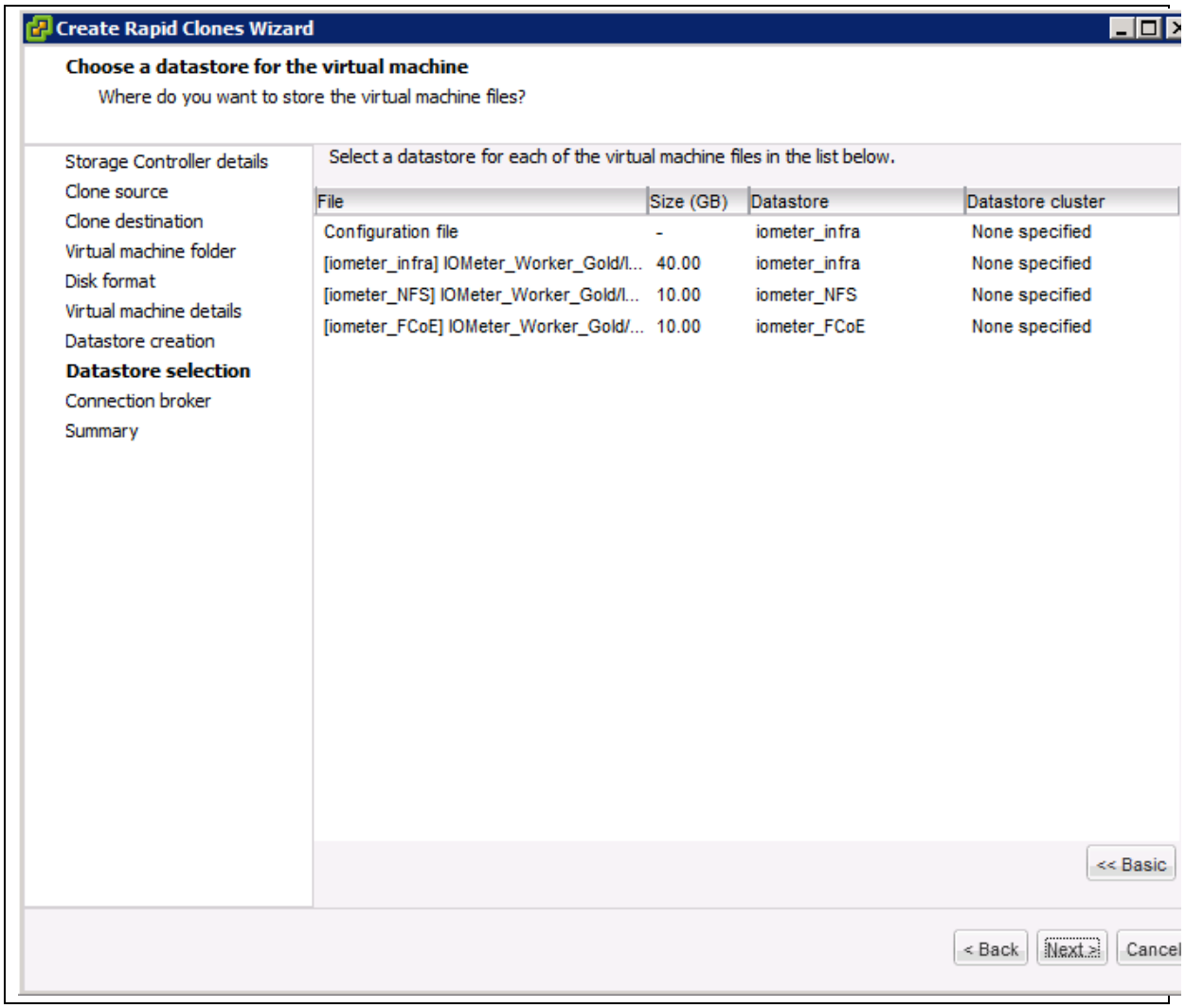

22. The cloning process will take several minutes, continue once the clones are created and powered on.

23. Each cloned VM should have received an IP address via Microsoft DHCP running on the “Win2k8_IOMeter_Gold” VM.
24. Log into the “Win2k8_IOMeter_Controller” VM and dboule click the “IOMeter” icon on the desktop to start the IOMeter controller GUI.

25. Open the “Scripts” folder located on the desktop and double click on “StartIometer_FlexPod”. This will begin the automated process of loggin in each cloned worker VM to the IOMeter controller.

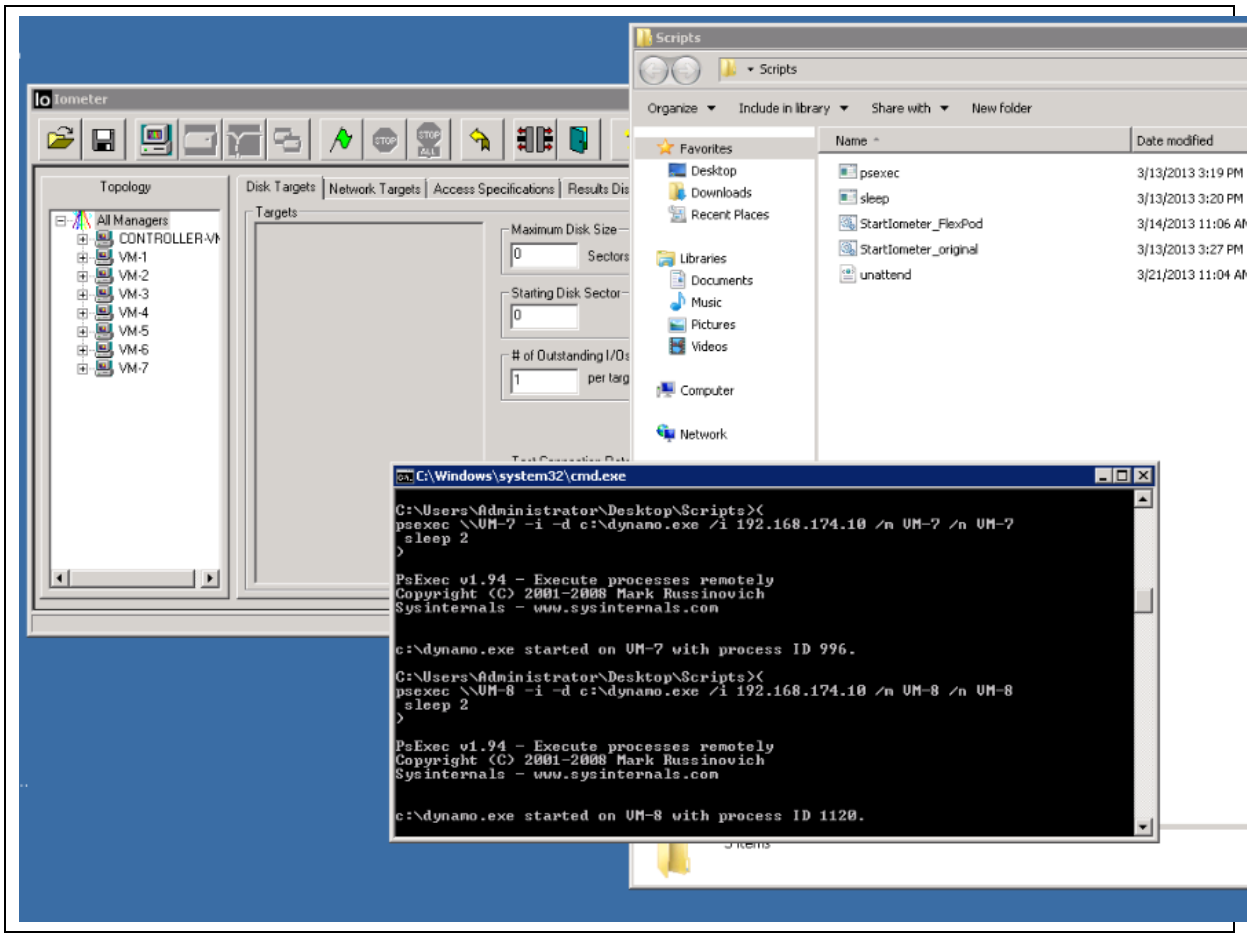

26. Once all 30 worker VMs are logged into the IOMeter controller GUI and show up in the “Topology” tree, click on the “Open” button in the upper left corner of the IOMeter controller GUI in order to open and load an IOMeter configuration file. The configuration file is “iometer_FlexPod_config” and is located on the Desktop. Click “Open” to open and apply the configuration.

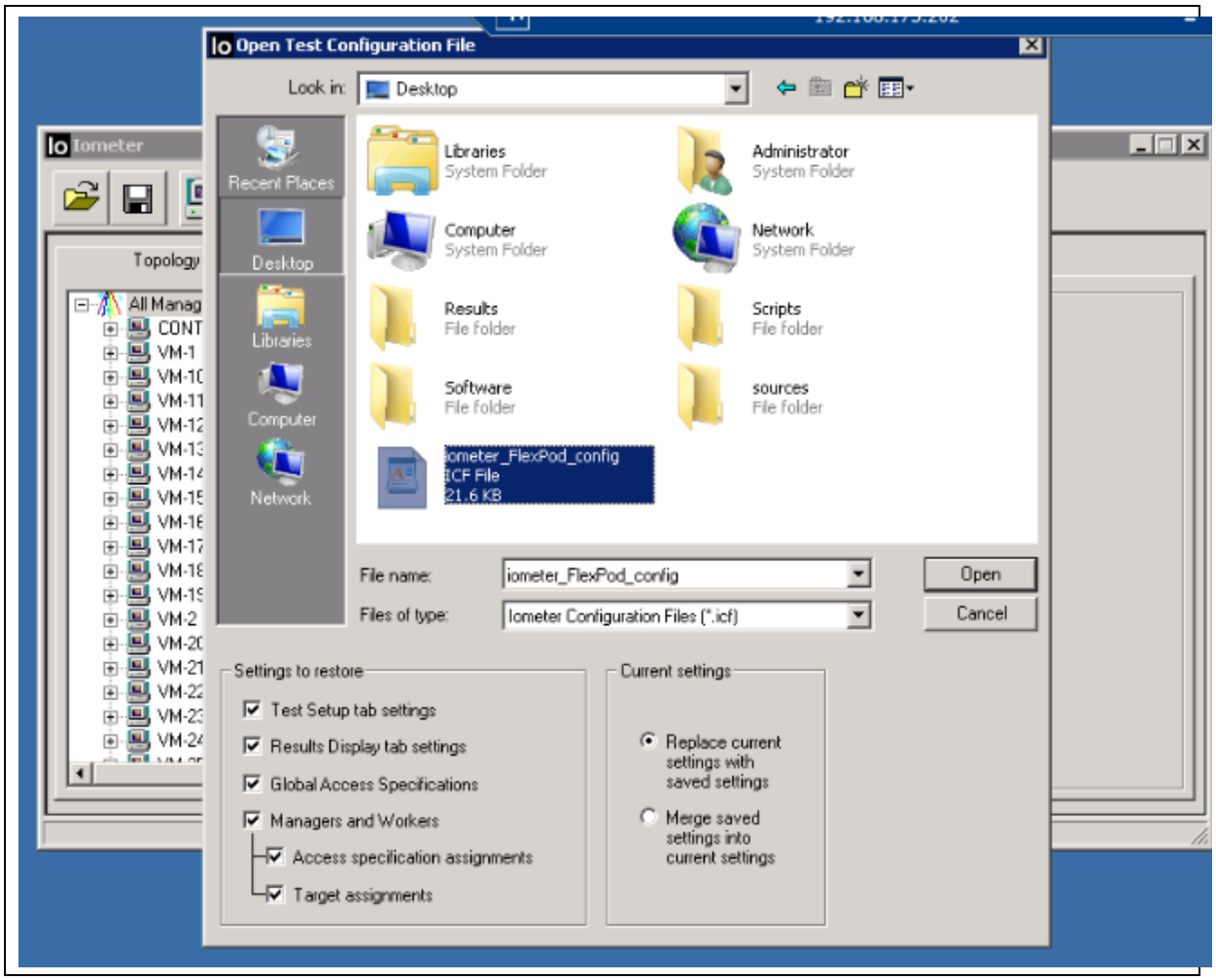

27. Once the configuration is loaded, the test is configured and is ready to start. Use the green flag button to start the test and use the stop sign button to stop the test

    NOTE: The first time the test is started, it will take some time to setup the environment. What that means is that IOMeter needs to go out and write pseudo data out to the necessary drives in order for it to run properly. This can take several minutes, maybe even an hour or so.

28. Upon starting a test, you will also be asked where you would like save the log file. Save the log file in a common location and name it so that it corresponds to the test case being run.

8 TEST SCENARIOS

This section provides details of the specific test cases to be executed as part of the testing. Please use the sample table below to provide the specifics of each test case to be executed.

Test Case Number	**FlexPod-0001**
Test Case Description	**Physical NetApp FAS Storage Contoller Failure (Clustered Data ONTAP Storage Failover)**

Test Methodology	In this failure scenario we will test the storage failover or “SFO” capability between pairs of storage systems running Clustered Data ONTAP.
	Procedure:
	1. Login to the cluster as the “admin” user through the cluster management LIF.
	2. Check to make sure storage failover is configured and capable. Issue the “storage failover show” command.
	`cluster::> storage failover show`
	`Takeover`
	`Node Partner Possible State`
	`---------- ---------- -------- ----------`
	`icef2-stcl-01 icef2-stcl-02 true Connected to icef2-stcl-02`
	`icef2-stcl-02 icef2-stcl-01 true Connected to icef2-stcl-01`
	`2 entries were displayed.`
	3. Force an immediate takeover of one node to it’s partner node, use the “immediate” option to simulate a node failure.
	`cluster::> storage failover takeover –ofnode <node to be failed> -option immediate`
	4. Once the takeover is complete, issue the giveback command.
	`cluster::> storage failover giveback –ofnode <failed node>`
	5. Perform steps 3 & 4 for each node in the cluster.

Test Data/Metrics to Capture	Start and stop the IOMeter test workload with each simulated failure so that an individual log file is saved for each run. Name the log files appropriately to correlate easier. Use the log files to determine wether any issues occurred in reliably delivering traffic from VM to VM or VM to storage.
Expected Results	There should minimal-to-no traffic loss/drop or interruption to the clients. If there is a small amount of disruption, time of disruption should still be mitigated by higher level protocols, TCP timeouts, etc.
Actual Results	No iometer errors reported on either failover (Node 1 to Node 2 or Node 2 to Node 1)
Time Required	15 minutes
Author, Date Completed	John George, 04/24/2013

Test Case Number	**FlexPod-0002**
Test Case Description	**Physical Clustered Data ONTAP Cluster Interconnect Switch (Nexus 5596UP) Failure**
Test Methodology	In this failure scenario we will manually remove power from the Cisco Nexus 5596UP cluster interconnect switches, one at a time, and observe traffic behavior. Power will be removed from one switch then we will observe, then power will be restored. Once Both switches are again operational, power will be removed from the second switch and traffic will be observed. Power will then be restored.
Test Data/Metrics to Capture	Observe all client to storage traffic using IOMeter or similar test harness.
Expected Results	Since the Clustered Data ONTAP cluster interconnect switches are deployed and configured as highly available paris, there should be no storage service interruption to the clients accessing any storage object within the Data ONTAP cluster.
Actual Results	No iometer workload errors. Cluster LIFs failed over properly and autoreverted when the switch was restored.
Time Required	10 minutes.
Author, Date Completed	John George, Lindsey Street 04/24/2013

Test Case Number	**FlexPod-0003**
Test Case Description	**Physical Nexus Data Switch (Nexus 5548UP) Failure**
Test Methodology	In this failure scenario we will manually remove power from the Cisco Nexus 5548UP data switches, one at a time, and observe traffic behavior. Power will be removed from one switch then we will observe, then power will be restored. Once Both switches are again operational, power will be removed from the second switch and traffic will be observed. Power will then be restored.
Test Data/Metrics to Capture	Observe all client to storage traffic using IOMeter or similar test harness.

Expected Results	The Nexus 5548UP data switches are deployed and configured as highly available Virtual Port-Channel peers. With the failure of one Nexus 5548UP, the traffic that previously traversed through the failed switch should converge and after minimal service disruption should continue the connection and traffic by traversing through the surviving switch.
Actual Results	No iometer errors. FCoE LIFs in storage failed when that fabric was down. All ifgrps went to partial state. System fully recovered in each case when the switch was brought back up.
Time Required	15 minutes
Author, Date Completed	John George, Lindsey Street, 04/24/2013

Test Case Number	**FlexPod-0004**
Test Case Description	**Physical Cisco UCS Fabric Interconnect Failure**
Test Methodology	In this failure scenario we will manually remove power from the Cisco UCS 6448UP fabric interconnects, one at a time, and observe traffic behavior. Power will be removed from one fabric interconnect then we will observe, then power will be restored. Once Both fabric inte are again operational, power will be removed from the second switch and traffic will be observed. Power will then be restored.
Test Data/Metrics to Capture	Note the test data/metrics to capture during the test case.
Expected Results	The surviving Fabric Interconnect must server the data traffic. If the removed FI was the primary, the remaining FI takes over the role of primary. If the removed FI was the secondary, the primary FI will continue to work as it is.
Actual Results	No iometer errors. Traffic moved away from the failed fabric.
Results Location	
Issues/BURTs Requiring Followup	
Testing Notes	Note any specific conditions or criteria that is relevant for the test case.

Time Required	20 minutes
Author, Date Completed	Lindsey Street, Chris Reno, John George 04/29/2013

Test Case Number	**FlexPod-0005**
Test Case Description	**Physical Cisco UCS 2232 Fabric Extender Failure**
Test Methodology	Pull out any one of the 2232PP FEX from the setup
Test Data/Metrics to Capture	
Expected Results	The rack server should still be accessible via the remaining FEX
Actual Results	The servers did stay accessible. Also, iometer showed no data errors. This was a re-run of an earlier test that had an issue. However, upgrade of iometer fixed the issue. This test was also run by resetting the chassis FEXes in UCS Manager.
Results Location	
Issues/BURTs Requiring Followup	
Testing Notes	
Time Required	4 hours
Author, Date Completed	John George, Lindsey Street, Chris Reno 05/17/2013

Test Case Number	**FlexPod-0006**
Test Case Description	**Cisco UCS B-Series Server Uplinks – IOM/FEX to Fabric Interconnect cable/link failure**

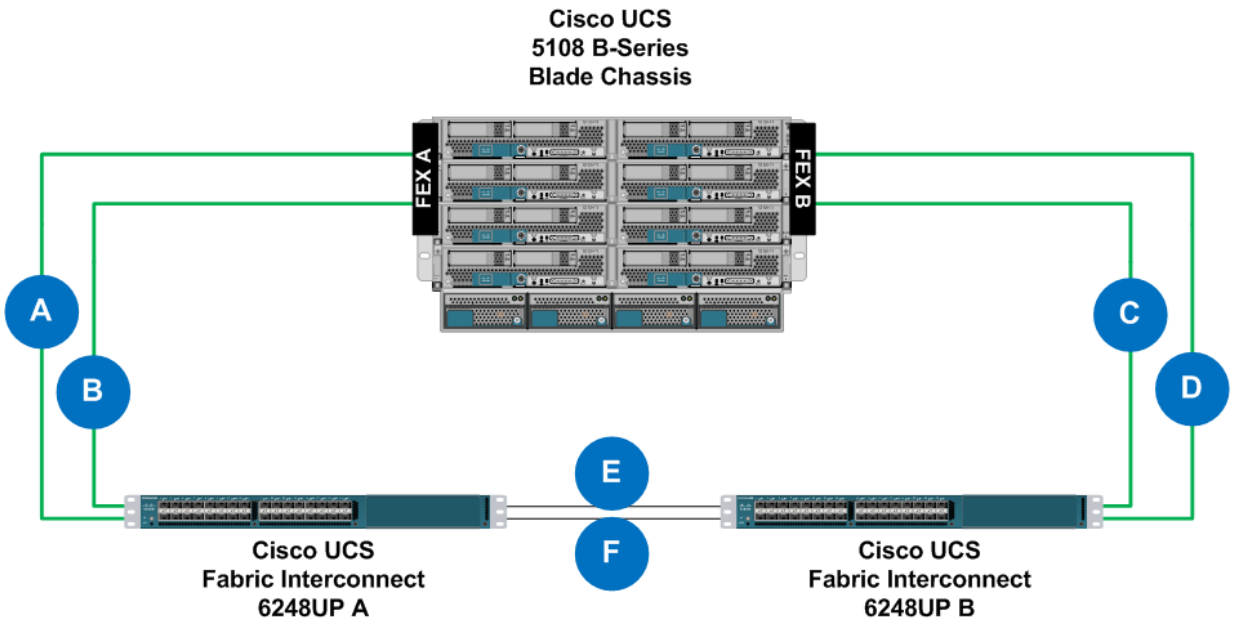

Test Methodology	Disable the server ports in one of the fabric interconnects Or Pull out the cables between IOM-A and FI-A or IOM-B and FI-B
Test Data/Metrics to Capture	Note the test data/metrics to capture during the test case.
Expected Results	The chassis should still remain discovered and all traffic should be carried via the remaining IOM and FI
Actual Results	Chassis, C-Series FEXes, and Servers remained discovered. Iometer showed no errors.
Results Location	
Issues/BURTs Requiring Followup	
Testing Notes	Note any specific conditions or criteria that is relevant for the test case.
Time Required	
Author, Date Completed	John George, 05/17/2013

Test Case Number	**FlexPod-0007**
Test Case Description	**Cisco UCS C-Series Link Failure Scenarios**
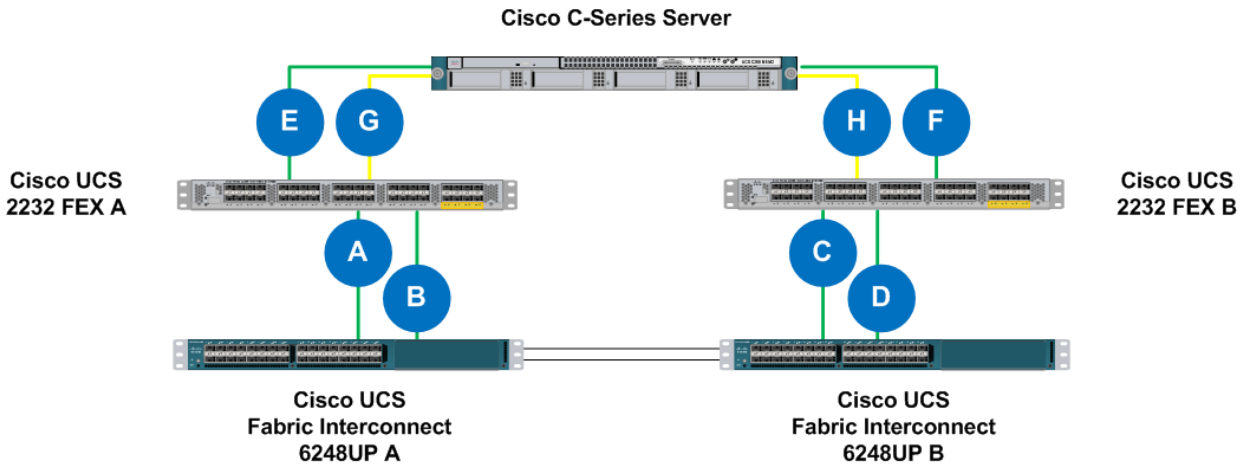	
Test Methodology	Pull out any one of the cables connecting the M1 and M2 ports on the C-series server. Pull out any one of the cables connecting Port 0 and Port 1 (10 GbE) on the C-series server.
Test Data/Metrics to Capture	Note the test data/metrics to capture during the test case.
Expected Results	The rack server should still be accessible via the remaining M1/M2 port and Port 0/Port 1
Actual Results	Server stayed discovered. No iometer errors detected.
Results Location	
Issues/BURTs Requiring Followup	
Testing Notes	Note any specific conditions or criteria that is relevant for the test case. For example:
Time Required	
Author, Date Completed	John George 05/03/2013

Test Case Number	**FlexPod-0008**
Test Case Description	**Cisco Nexus to Cisco UCS Ethernet Uplink Failure Scenarios**

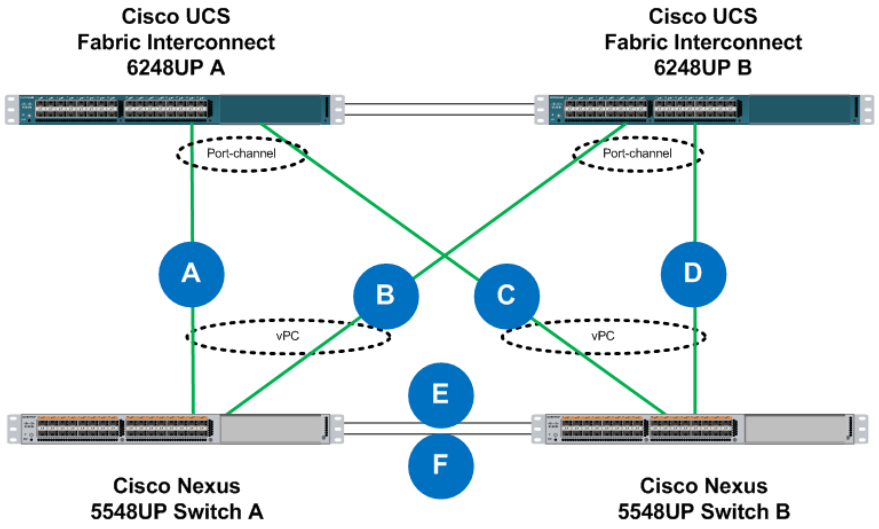

Test Methodology	Each Nexus is connected to both Fabric Interconnects and are in a vPC; pull out one of the cables
Test Data/Metrics to Capture	Note the test data/metrics to capture during the test case.
Expected Results	The port channel status must still be up and should be able to carry traffic. Check it in the Nexus as well as the UCS Manager.
Actual Results	vPC on affected switch went down, but port-channel on UCS stayed up. Iometer had no errors.
Results Location	
Issues/BURTs Requiring Followup	
Testing Notes	Note any specific conditions or criteria that is relevant for the test case.
Time Required	
Author, Date Completed	John George, 05/03/2013

Test Case Number	**FlexPod-0009**

Test Case Description	**Cisco Nexus to NetApp Storage Ethernet Uplink Failure Scenarios**

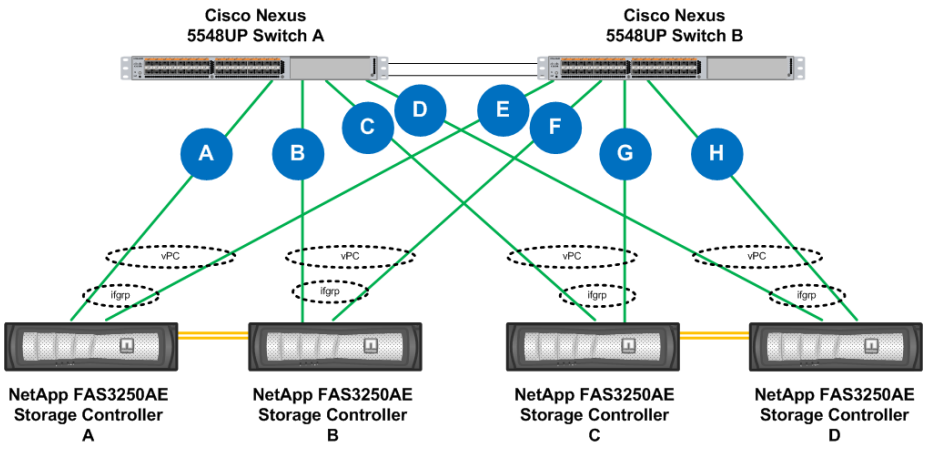

Test Methodology	Each FAS node is connected to both the Nexus switches and are configured in a vPC, pull out one of the cables connecting to the Nexus
Test Data/Metrics to Capture	
Expected Results	The port channel status must still be up and should be able to carry traffic.
Actual Results	Ifgrps stayed up, but vPC on affected switch went down. Iometer showed no errors.
Results Location	
Issues/BURTs Requiring Followup	
Testing Notes	Note any specific conditions or criteria that is relevant for the test case.
Time Required	15 minutes
Author, Date Completed	John George, 05/03/2013

Test Case Number	**FlexPod-0010**
Test Case Description	**UCS Server – Virtual Interfaces Failure**

Test Methodology	Delete or disable any one of the vNICs and any one of the vHBAs from the UCS server
Test Data/Metrics to Capture	
Expected Results	The UCS server must be able to communicate with the external network and private internal network (if any) and also be able to reach its boot lun, via the remaining vNIC and vHBAs respectively.
Actual Results	I did not remove a vNIC or vHBA from the service profile. This would have been destructive to the service profile. Instead, I removed the vmnic from the system uplink in the nexus 1000v, then put it back in. iometer had no errors in this test.
Results Location	
Issues/BURTs Requiring Followup	
Testing Notes	
Time Required	15 minutes
Author, Date Completed	John George, 05/17/2013

Test Case Number	**FlexPod-0011**
Test Case Description	**Fabric Interconnects L1 & L2 - Failure**
Test Methodology	Pull out any one of the cables connecting the L1 and L2 ports in the FIs.
Test Data/Metrics to Capture	
Expected Results	The connectivity between FI should still be there and they should be able to exchange heartbeats and should not lead to a split brain scenario.
Actual Results	FIs stayed connected. An alarm was raised on UCS Manager. No other effects on system.
Results Location	
Issues/BURTs Requiring Followup	
Testing Notes	
Time Required	15 minutes
Author, Date Completed	John George, 05/29/2013

Test Case Number	**FlexPod-0012**
Test Case Description	**UCS FI to Nexus FCoE Uplink**
Test Methodology	Each FI is straight connected to its North Bound Nexus i.e. FI A → Nexus A and FI B → Nexus B; each of these is port channeled. Shut any one of these port-channels
Test Data/Metrics to Capture	
Expected Results	The Blades on the UCS should be able to reach the Nexus via the remaining Port Channel
Actual Results	Server active paths on the fabric with the failed port channel went down and the recovered when port channel was restored. No iometer errors.
Results Location	
Issues/BURTs Requiring Followup	
Testing Notes	
Time Required	15 minutes
Author, Date Completed	John George, 05/29/2013

Test Case Number	**FlexPod-0013**
Test Case Description	**Nexus vPC Peer Link - Failure**
Test Methodology	Two interfaces from each Nexus are used to form a vPC peer-link; pull out any one of these links
Test Data/Metrics to Capture	
Expected Results	The vPC configurations must still be intact
Actual Results	When just one link taken down, no impact. I actually took down the entire peer-link. In this case, the B-side switch shut down all vPC port channels. This still had no impact on iometer. The system recovered properly with no impact on workload.
Results Location	
Issues/BURTs Requiring Followup	
Testing Notes	
Time Required	15 minutes
Author, Date Completed	John George, 05/29/2013

Test Case Number	**FlexPod-0014**
Test Case Description	**Redundant Power- Failover**
Test Methodology	Sanity check to ensure that all power supplies are active.
Test Data/Metrics to Capture	
Expected Results	Make sure all power supplies are online and have a failover connection.
Actual Results	Did not run this test.
Results Location	
Issues/BURTs Requiring Followup	
Testing Notes	
Time Required	
Author, Date Completed	

9 TEST CASE RECOMMENDATIONS

Specific test case definitions will vary from solution to solution. Some test cases may be valid for one solution and not applicable for others. The overall solution validation goal is to include test cases that exercise a broad range of customer relevant solution functions. In general, the complete range of test cases should be performed for each protocol under test. Recommended test cases should include, but not be limited to:

- Establish baseline solution performance under relevant load. Recommended load should be in the 40% - 60% utilization range. All test cases described below should be executed under baseline load.
- For Cluster-mode, use the baseline load to compare the performance of the following three scenarios:
    - Accessed data is 100% local
    - Accessed data is 50% local and 50% remote
    - Accessed data is 100% remote
- Test solution backup and restore operations under load using relevant application integration B/R products – SnapDrive/SnapManagers, SnapProtect, etc. Test both manual and scheduled backups.
- Test solution backup coupled with SnapMirror updates to secondary site
- Test relevant solution disaster recovery/business continuance scenarios including primary site failover to secondary site and failback.
- Test clone creation, usage, and deletion under load driven by application integration products or other customer relevant management tools.
- Test volume movement under load. Verify no application impact. Measure the performance impact of volume movement to the baseline load.
- Test relevant RBAC features and verify proper permissions are in place for management operations, system data, and user data. Test different admin roles to verify proper access restrictions to sensitive operations and data.
- If this is an update to an existing solution, test the upgrade process from the existing solution configuration to the new solution configuration. Document the upgrade steps for inclusion in the solution collateral.
- Destructive testing (all tests should be performed under baseline load and verified that there is no unexpected application impact):
    - Test host failure. Does host application recover in a crash consistent state?
    - Test planned manual storage controller failover. Test controller giveback.
    - Test unplanned storage controller failover. Test controller giveback.
    - Test link failure between host and switch. Verify I/O continues over alternate path.
    - Test link failure between storage and switch. Verify I/O continues over alternate path.
    - Test failure of switch between host and storage. Verify I/O continues over alternate switch paths.
    - Test link failure of cluster interconnect in Cluster-mode. Verify I/O continues over alternate path.

- Test failure of cluster interconnect switch in Cluster-mode. Verify I/O continues over alternate switch paths.
- Test single disk drive failure and subsequent rebuild operation. Measure performance impact of rebuild/reconstruct operation.
- Test double disk drive failure and subsequent rebuild operations. Measure performance impact of rebuild/reconstruct operation.
- Test disk loop failure
- Test unplanned Metadata server failure. Verify Metadata operations continue with secondary Metadata server. Test Metadata server failback.
- Test planned manual Metadata server failover. Verify Metadata operations continue with secondary Metadata server. Test Metadata server failback.
- Test link failure between Metatdata server and switch. Verify I/O continues over alternate path.
- **Reviewers note** – please add other destructive tests that you believe should be included in the list

- **Reviewers note** – please add other tests that you believe should be included in the list